VIT
Vellore Institute of Technology
CHENNAI

Reg. Number:	22BAI1266

Continuous Assessment Test (CAT) – II October 2025

Programme	:	B.Tech. Computer Science and Engineering (AI/ML)	Semester	:	Fall Semester 2025 – 26
Course Code & Course Title	:	BCSE416L & Game Programming	Class Number	:	CH2025260102071
Faculty	:	S. Graceline Jasmine	Slot	:	C1+TC1
Duration	:	1hr & 30mins	Max. Mark		50

General Instructions:

- Write only your registration number on the question paper in the box provided and do not write other information
- Use statistical tables supplied from the exam cell as necessary
- Use graph sheets supplied from the exam cell as necessary
- Only non-programmable calculator without storage is permitted

Answer all questions

Q. No	Sub Sec.	Description	Marks	CO	BT Level
1.		In the Lambertian diffuse lighting model, consider a wall whose surface vector is N = (0, 1, 2). A light source with colour LColor = (3, 0, 2) illuminates the wall from the direction L = (2, 1, 0). The surface color is (0.4, 0.3, 0.9). The intensity of the wall's diffuse reflection at each point depends on the angle between the surface normal and the incoming light, producing a soft, evenly distributed illumination that reflects how the wall is oriented relative to the light source. • Calculate the normalized forms of both the surface vector N and the light direction vector L. [4 Marks] • Compute the angle between the normal vector and the light direction. [4 Marks] • Determine the diffuse contribution of the light on the surface. Find the final diffuse colour contributed by the light to the surface. [2 Marks]	10	2	K4
2.		In a 3D game, you apply a bump map to a stone wall for added realism. • Why must the normal vector from the bump map (in [0,1]) be converted to a signed range [−1,1]? Give a small numerical example. [5 Marks] • Briefly explain the steps to create and apply a bump map to the wall in Unity game engine. [5 Marks]	10	2	K3
3.		In a physics-based adventure game, a player must drag a heavy stone block up a sloped pathway to unlock a secret gate. The stone has a mass of 2 kg and the slope makes an angle of 30° with the horizontal. To move the stone, the player applies a pulling force of 15N along the slope, moving it a	10	1	K2

		distance of 5m. The game uses a realistic physics engine with the gravitational constant g=9.8 m/s^2. Use the fig. 1 as reference. 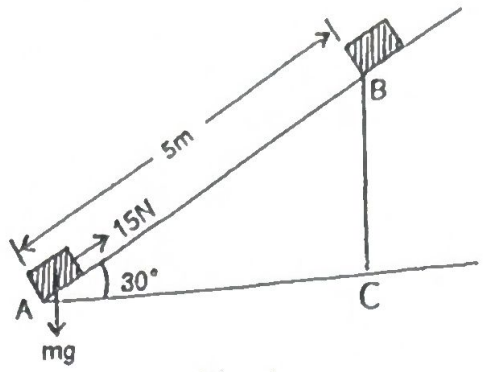 Fig. 1 Based on the scenario given, calculate the following: • The work done by the player's force in pulling the stone block up the slope. [3 Marks] • The force due to gravity acting on the stone block. [3 Marks] • The work done against gravity in lifting the block to its new height. [4 Marks]			
4.		In a 2D game world, a player is represented as a rectangular zone. Several objects in the game cast straight line paths (like lasers, bullets, or detection rays). Each endpoint of a line is assigned a 4-bit region code based on its position relative to the player. The following four line paths are given with their endpoint codes: • Line 1: P1 → [1000], P2 → [0000] • Line 2: P1 → [0001], P2 → [0000] • Line 3: P1 → [0010], P2 → [0010] • Line 4: P1 → [0100], P2 → [0000] Using the given region codes, determine for each line whether it is: • Fully inside the player's zone (line lies completely within the player) • Completely outside the player (line never touches the player) • Colliding with the player (line crosses or touches the player's boundary). • Illustration and Justification are required for all the four lines given. [8 marks] • Mention the rules used to determine the collision in the above scenario. [2 Marks]	10	1	K4
5.	a)	In a two-player turn-based game, the game tree represents possible moves and outcomes. The root node at level 0 corresponds to the AI's turn (Max), the nodes at level 1 represent the opponent's moves (Min), the nodes at level 2 represent the AI's next moves (Max), and the leaf nodes at level 3 represent the final game states with scores. The leaf node values, from left to right, are 2, 3, 5, 9, 0, 1, 7, 5. Using Alpha-Beta Pruning, determine the value of the root node and identify which leaf nodes can be pruned and skipped during evaluation.	5	2	K4

	b)	A delivery robot is navigating a large warehouse represented as a grid. The robot must determine the shortest path from its starting point to a delivery location. The warehouse contains multiple aisles and intersections, some of which may result in longer routes. The robot can move up, down, left, or right, with each move having the same cost, but it cannot move diagonally. • Which search strategy should the robot use to find the shortest path efficiently in this environment? Mention how the search explores the environment. [2 marks] • Justify your choice by discussing memory and time trade-offs. [2 Marks] • Whether the strategy guarantees the shortest path? Justify. [1 Mark]	5		

**********All the best **********